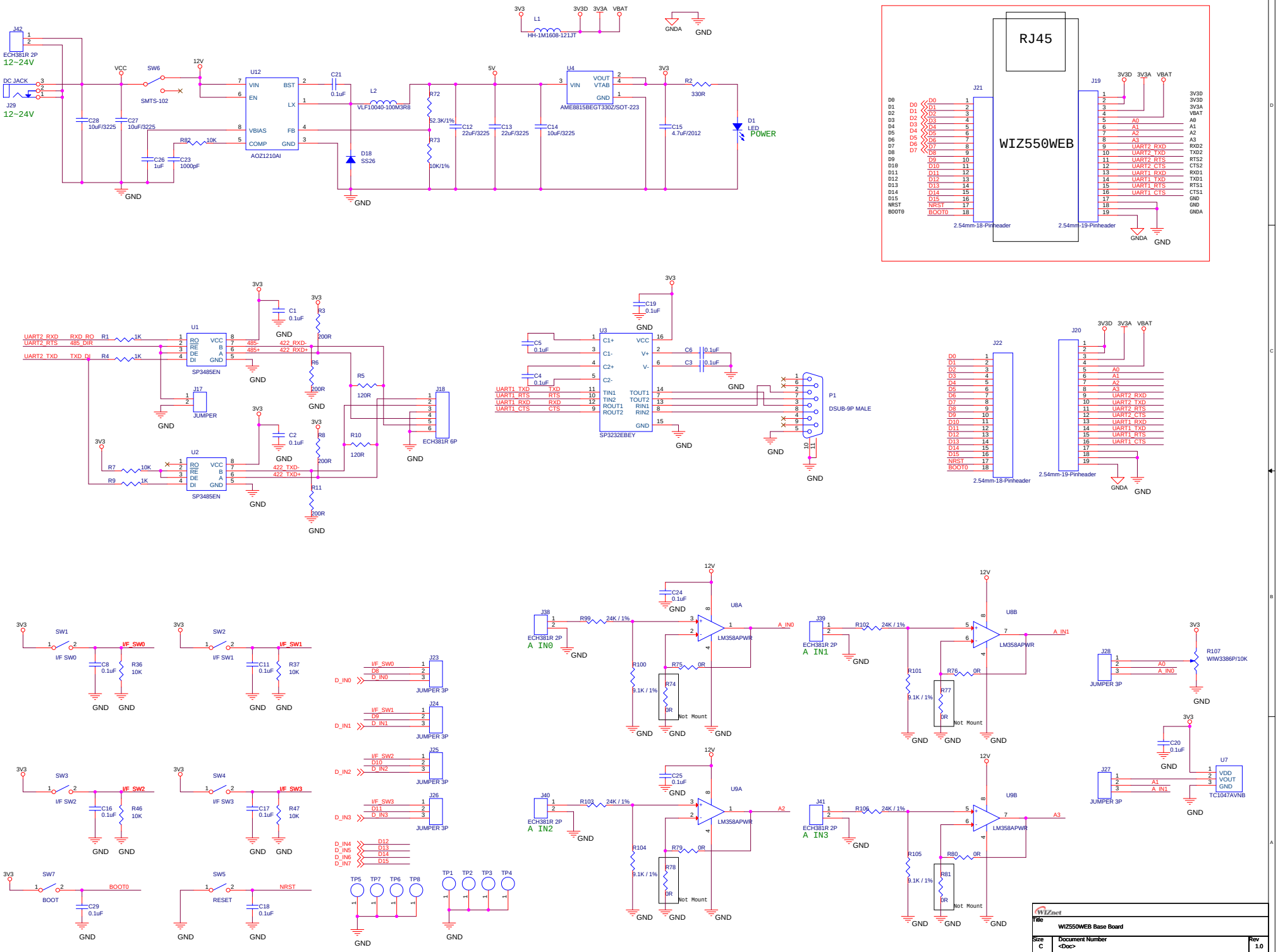
J42
ECH381R 2P
12~24V
DC JACK
J29
12~24V
VCC
SW6
SMTS-102
12V
U12
VIN
EN
VBIAS
COMP
BST
LX
FB
GND
AOZ1210AI
C28
10uF/3225
C27
10uF/3225
R82
10K
C26
1uF
C23
1000pF
C21
0.1uF
L2
VLF10040-100M3R8
D18
SS26
R72
52.3K/1%
R73
10K/1%
C12
22uF/3225
C13
22uF/3225
C14
10uF/3225
5V
U4
VIN
VOUT
VTAB
GND
AME8815BEGT330Z/SOT-223
3V3
R2
330R
C15
4.7uF/2012
D1
LED
POWER
3V3
L1
HH-1M1608-121JT
3V3D
3V3A
VBAT
GNDA
GND
RJ45
WIZ550WEB
J21
2.54mm-18-Pinheader
J19
2.54mm-19-Pinheader
D0
D1
D2
D3
D4
D5
D6
D7
D8
D9
D10
D11
D12
D13
D14
D15
NRST
BOOT0
3V3D
3V3D
3V3A
VBAT
A0
A1
A2
A3
RXD2
TXD2
RTS2
CTS2
RXD1
TXD1
RTS1
CTS1
GND
GND
GNDA
UART2_RXD
RXD_RO
R1
1K
UART2_RTS
485_DIR
UART2_TXD
TXD_DI
R4
1K
U1
RO
RE
DE
DI
VCC
B
A
GND
SP3485EN
485-
485+
422_RXD-
422_RXD+
R3
200R
R6
200R
C1
0.1uF
J17
JUMPER
R5
120R
R10
120R
J18
ECH381R 6P
U2
R7
10K
R9
1K
422_TXD-
422_TXD+
R8
200R
R11
200R
C2
0.1uF
C19
0.1uF
U3
C1+
C1-
C2+
C2-
VCC
V+
V-
TIN1
TIN2
ROUT1
ROUT2
TOUT1
TOUT2
RIN1
RIN2
SP3232EBEY
C5
0.1uF
C4
0.1uF
C6
0.1uF
C3
0.1uF
UART1_TXD
UART1_RTS
UART1_RXD
UART1_CTS
TXD
RTS
RXD
CTS
P1
DSUB-9P MALE
J22
J20
2.54mm-18-Pinheader
2.54mm-19-Pinheader
SW1
I/F SW0
I/F_SW0
C8
0.1uF
R36
10K
SW2
I/F SW1
I/F_SW1
C11
0.1uF
R37
10K
SW3
I/F SW2
I/F_SW2
C16
0.1uF
R46
10K
SW4
I/F SW3
I/F_SW3
C17
0.1uF
R47
10K
SW7
BOOT
BOOT0
C29
0.1uF
SW5
RESET
NRST
C18
0.1uF
J23
J24
J25
J26
JUMPER 3P
D_IN0
D_IN1
D_IN2
D_IN3
D_IN4
D_IN5
D_IN6
D_IN7
D12
D13
D14
D15
TP5
TP7
TP6
TP8
TP1
TP2
TP3
TP4
J38
ECH381R 2P
A IN0
R99
24K / 1%
C24
0.1uF
U8A
LM358APWR
A_IN0
R100
9.1K / 1%
R74
0R
R75
0R
Not Mount
J39
ECH381R 2P
A IN1
R102
24K / 1%
U8B
LM358APWR
A_IN1
R101
9.1K / 1%
R77
0R
R76
0R
J40
ECH381R 2P
A IN2
R103
24K / 1%
C25
0.1uF
U9A
LM358APWR
A2
R104
9.1K / 1%
R78
0R
R79
0R
J41
ECH381R 2P
A IN3
R106
24K / 1%
U9B
LM358APWR
A3
R105
9.1K / 1%
R81
0R
R80
0R
J28
JUMPER 3P
A0
A_IN0
R107
WIW3386P/10K
C20
0.1uF
J27
JUMPER 3P
A1
A_IN1
U7
VDD
VOUT
GND
TC1047AVNB
WIZnet
Title
WIZ550WEB Base Board
Size
C
Document Number
<Doc>
Rev
1.0
Date:
Thursday, September 25, 2014
Sheet
1
of
2

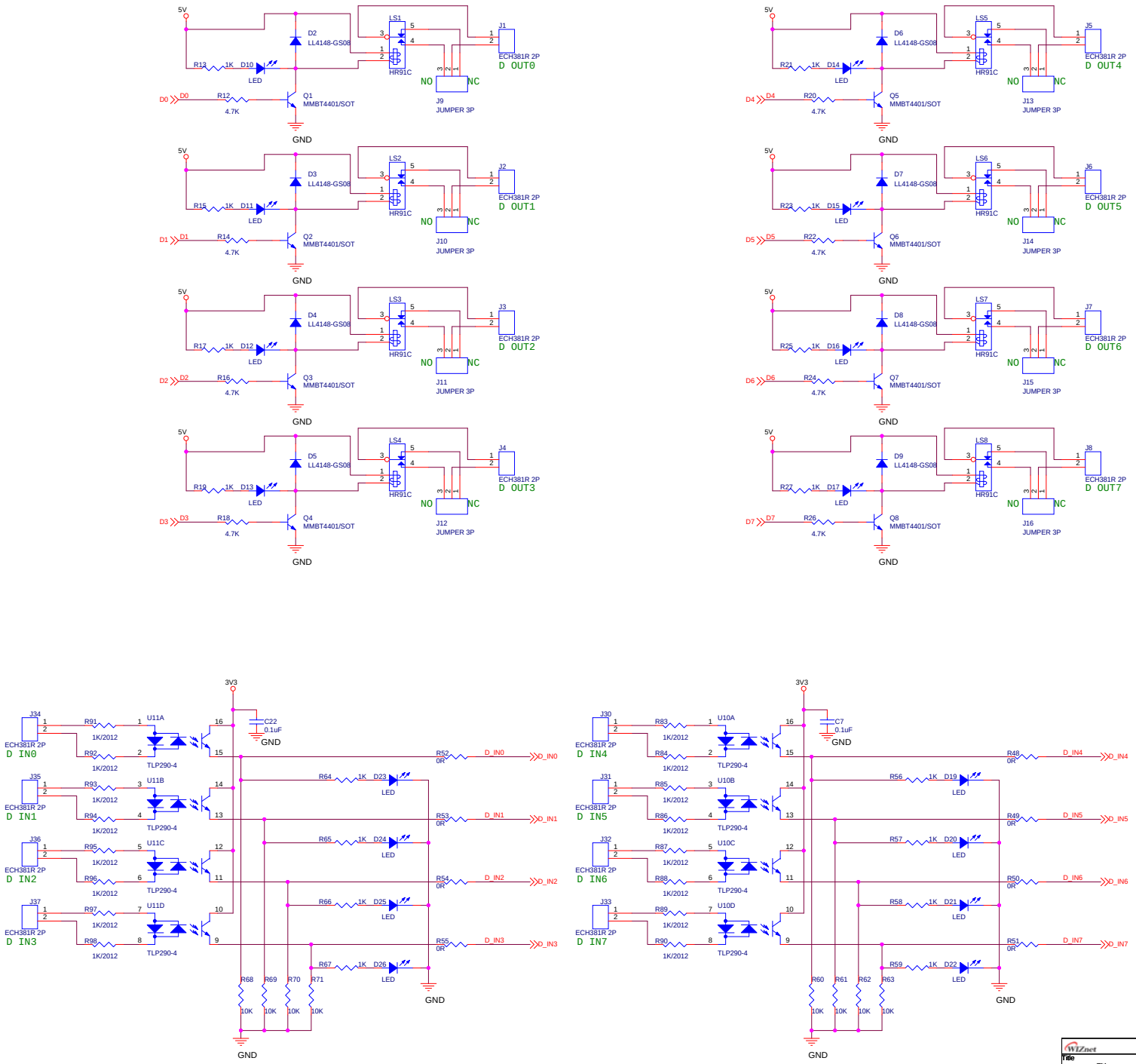

WIZnet		
Title	<Title>	
Size C	Document Number <Doc>	Rev <RevCode>
Date: Thursday, September 25, 2014	Sheet 2 of 2	