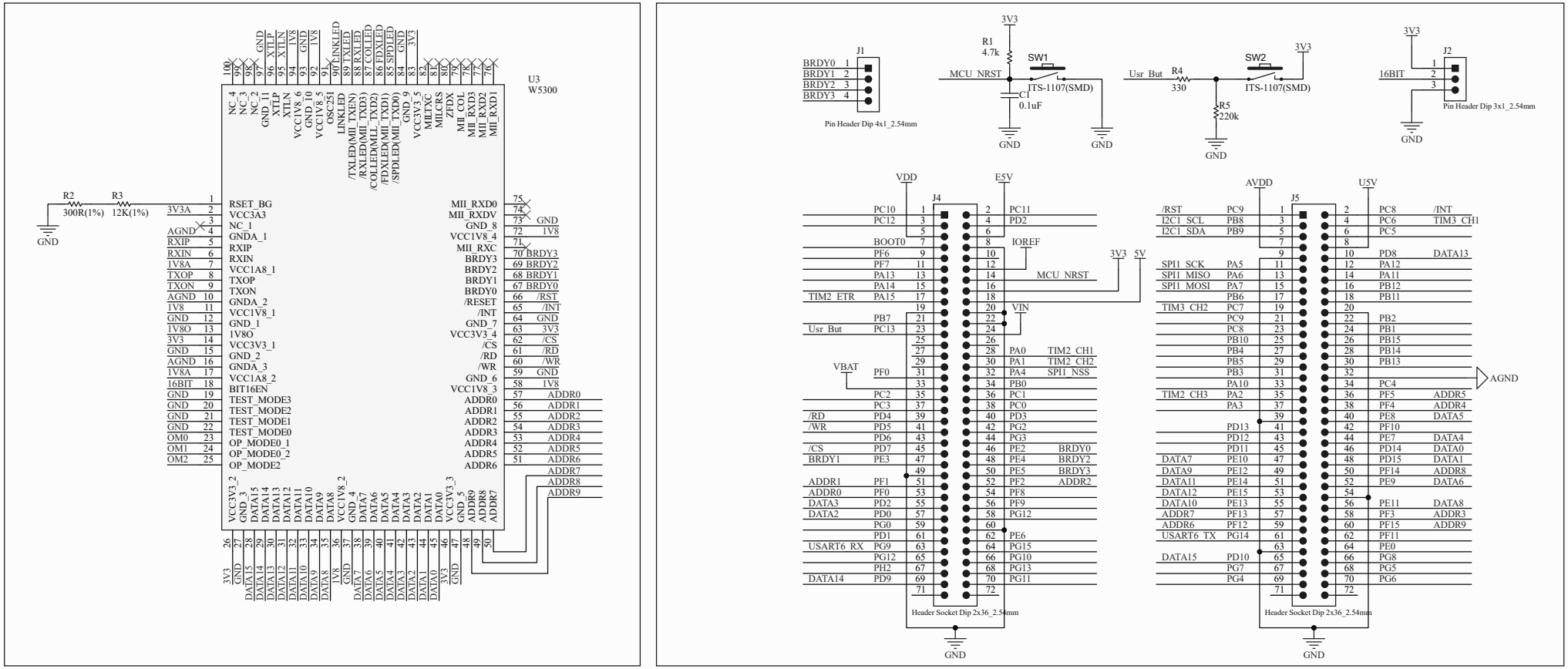

CAP

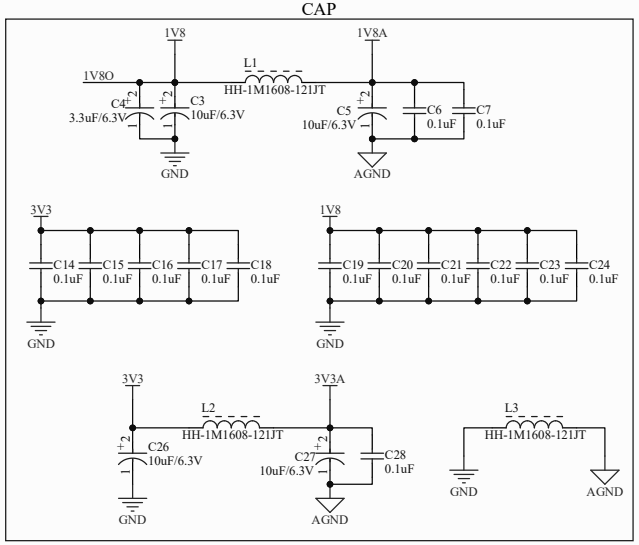

POWER

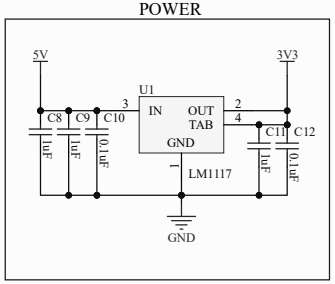

Use this component if 3V3 is not enough

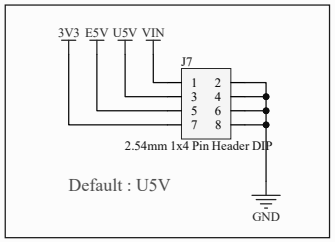

XTAL

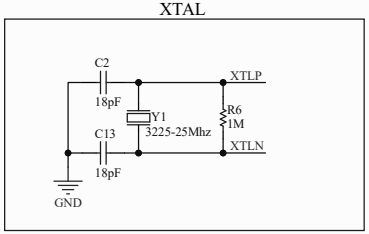

POR

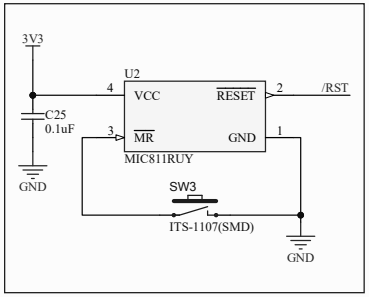

ARDUINO

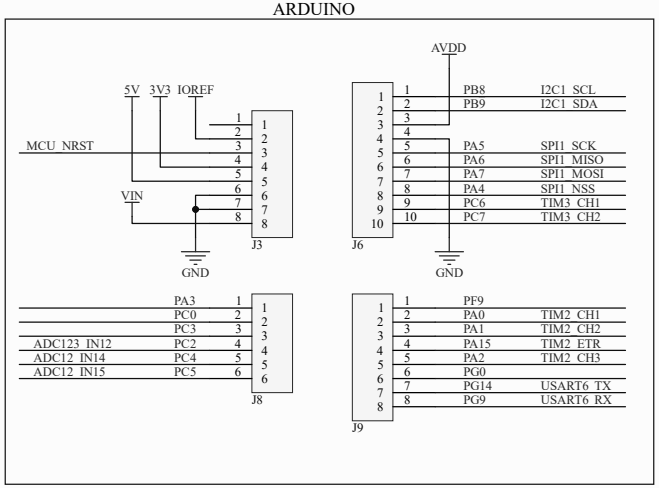

Title		
Size A3	Number	Revision
Date: 3-07-2023	Sheet of	
File: D:\Product\...\W5300 TOE Shield.SchDoc	Drawn By:	

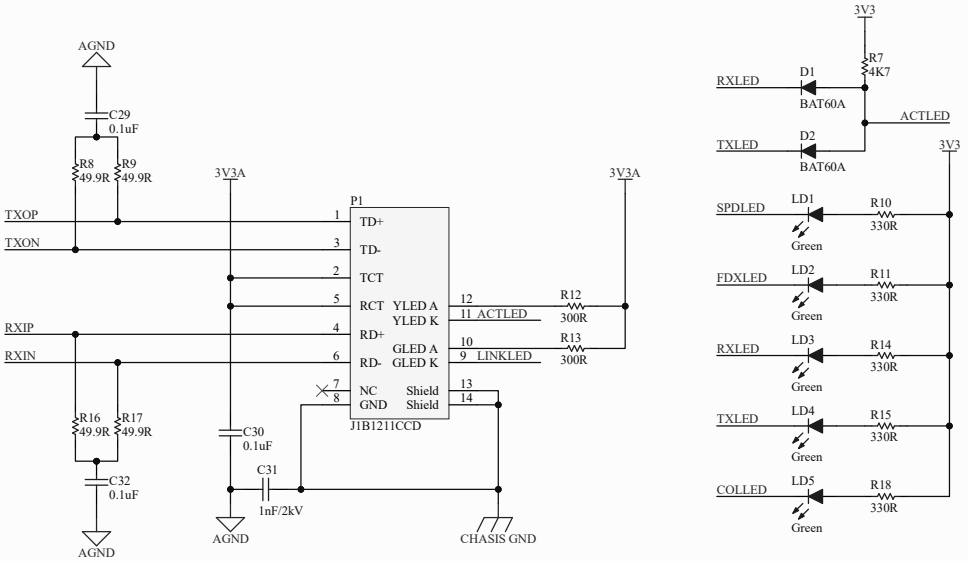
AGND
C29
0.1uF
R8
49.9R
R9
49.9R
3V3A
P1
TXOP
TXON
RXIP
RXIN
TD+
TD-
TCT
RCT
RD+
RD-
NC
GND
YLED A
YLED K
GLED A
GLED K
Shield
Shield
ACTLED
LINKLED
R12
300R
R13
300R
J1B1211CCD
R16
49.9R
R17
49.9R
C30
0.1uF
C31
1nF/2kV
C32
0.1uF
CHASIS GND

3V3
R7
4K7
RXLED
D1
BAT60A
ACTLED
TXLED
D2
BAT60A
SPDLED
LD1
R10
330R
Green
FDXLED
LD2
R11
330R
RXLED
LD3
R14
330R
TXLED
LD4
R15
330R
COLLED
LD5
R18
330R

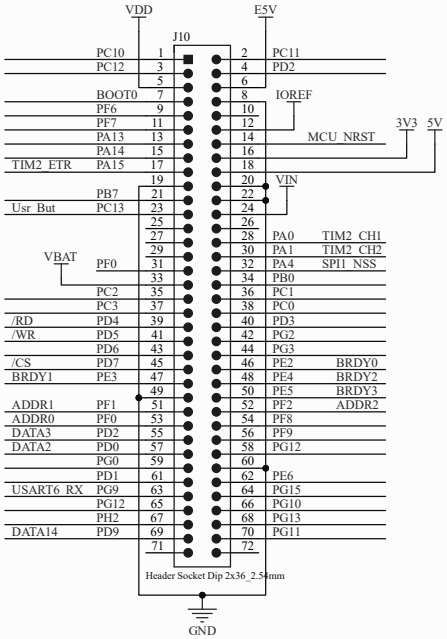
VDD
E5V
J10
IOREF
3V3
5V
MCU_NRST
VIN
VBAT
Header Socket Dip 2x36_2.54mm
GND

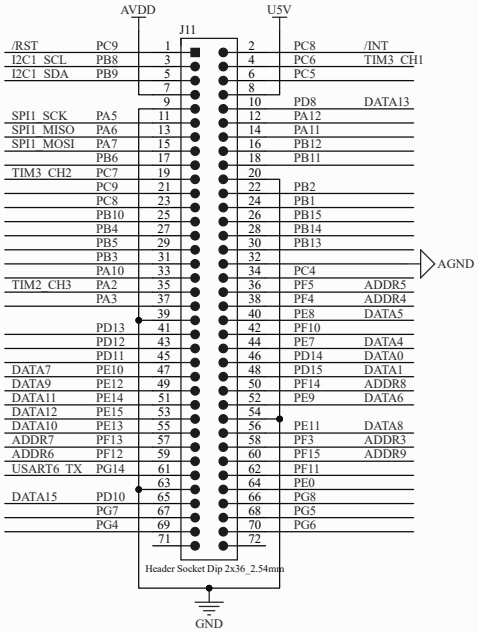
AVDD
U5V
J11
AGND
Header Socket Dip 2x36_2.54mm
GND