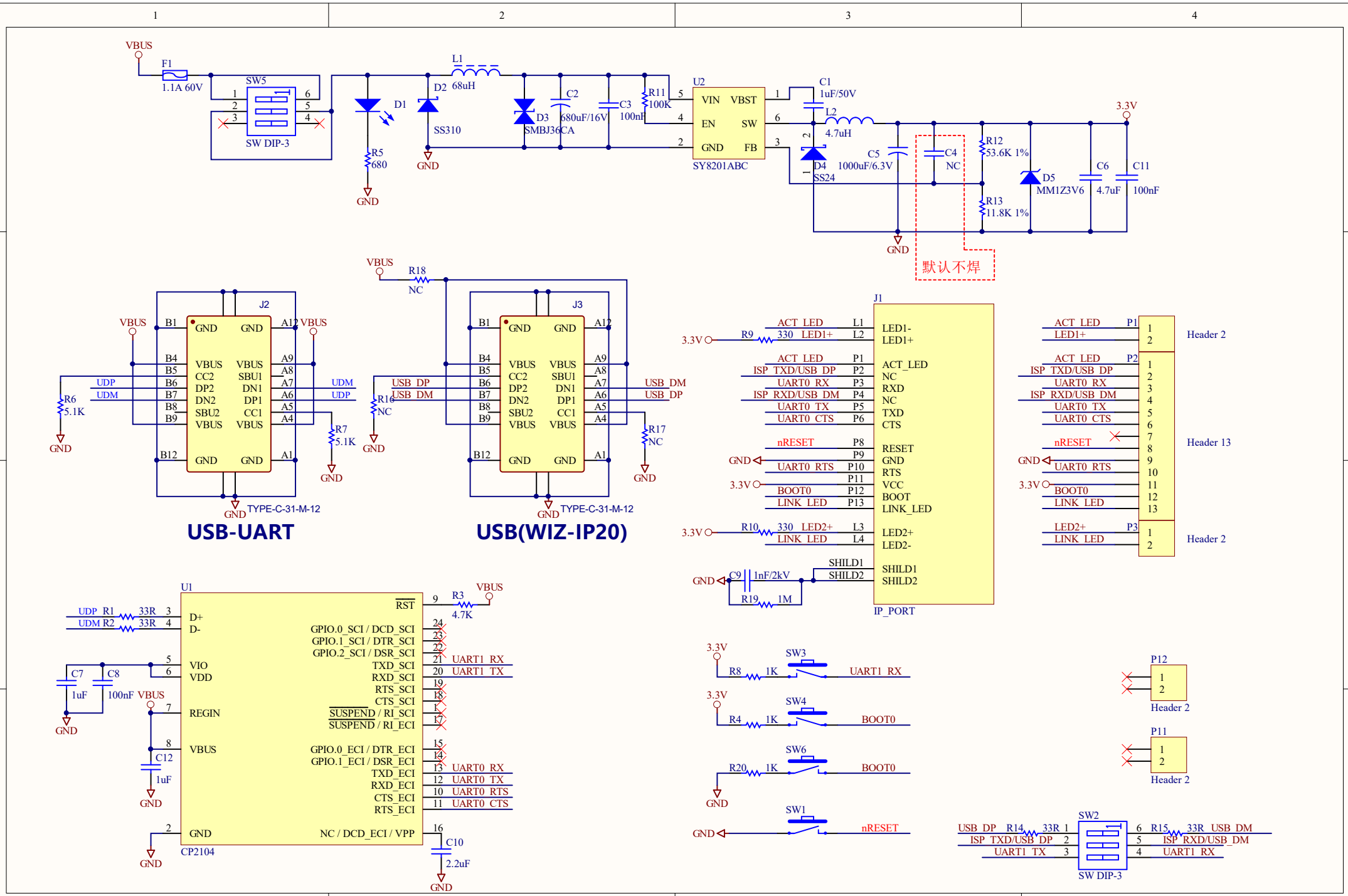
VBUS
F1
1.1A 60V
SW5
SW DIP-3
D1
R5
680
GND
D2
SS310
L1
68uH
D3
SMBJ36CA
C2
680uF/16V
C3
100nF
R11
100K
U2
VIN
VBST
EN
SW
GND
FB
SY8201ABC
C1
1uF/50V
L2
4.7uH
D4
SS24
C5
1000uF/6.3V
C4
NC
默认不焊
R12
53.6K 1%
R13
11.8K 1%
D5
MM1Z3V6
C6
4.7uF
C11
100nF
3.3V
J2
TYPE-C-31-M-12
USB-UART
R18
NC
J3
R16
NC
R17
NC
USB(WIZ-IP20)
J1
IP_PORT
ACT_LED
LED1-
LED1+
R9
330
ISP_TXD/USB_DP
UART0_RX
ISP_RXD/USB_DM
UART0_TX
UART0_CTS
nRESET
UART0_RTS
BOOT0
LINK_LED
LED2+
LED2-
SHILD1
SHILD2
C9
1nF/2kV
R19
1M
R10
Header 2
Header 13
U1
CP2104
UDP_R1
UDM_R2
33R
D+
D-
VIO
VDD
REGIN
VBUS
RST
R3
4.7K
GPIO.0_SCI / DCD_SCI
GPIO.1_SCI / DTR_SCI
GPIO.2_SCI / DSR_SCI
TXD_SCI
RXD_SCI
RTS_SCI
CTS_SCI
SUSPEND / RI_SCI
SUSPEND / RI_ECI
GPIO.0_ECI / DTR_ECI
GPIO.1_ECI / DSR_ECI
TXD_ECI
RXD_ECI
CTS_ECI
RTS_ECI
NC / DCD_ECI / VPP
C7
1uF
C8
100nF
C12
1uF
C10
2.2uF
SW3
SW4
SW6
SW1
R8
1K
R4
R20
P12
P11
SW2
USB_DP
R14
R15
USB_DM
ISP_TXD/USB_DP
ISP_RXD/USB_DM
UART1_TX
UART1_RX